Buy parts on line at https://Dynashop.co.uk/ for all things Dynabrade

Parts Page Reorder No. PD08•44
Effective August, 2008

# 96100 Motor Tune-Up Kit

***For Use With All:***
***1.3hp Sanders and***
***Depressed Center Wheel Grinders***

*Air Motor Parts*

**Parts included in tune-up kit are identified by part number.**
**Please refer to appropriate parts page for additional identification and disassembly/assembly instructions.**

## Index Key

| No. | Part # | Description |
|---|---|---|
| 1 | 25283 | Exhaust Port Silencer |
| 2 | 25282 | Silencer |
| 3 | 01007 | Bearing |
| 4 | 01294 | Shim (as required) |
| 5 | 01293 | Shim (as required) |
| 6 | 98242 | O-Ring |
| 7 | 25234 | Vane (4/Pkg.) |
| 8 | 01206 | Bearing |
| 9 | 66435 | O-Ring |
| 10 | 12132 | Pin |
| 11 | 25247 | Valve Stem Assembly (Incld 96443 O-Ring) |
| 12 | 25249 | Tip Valve |
| 13 | 25250 | Spring |
| 14 | 96442 | O-Ring |

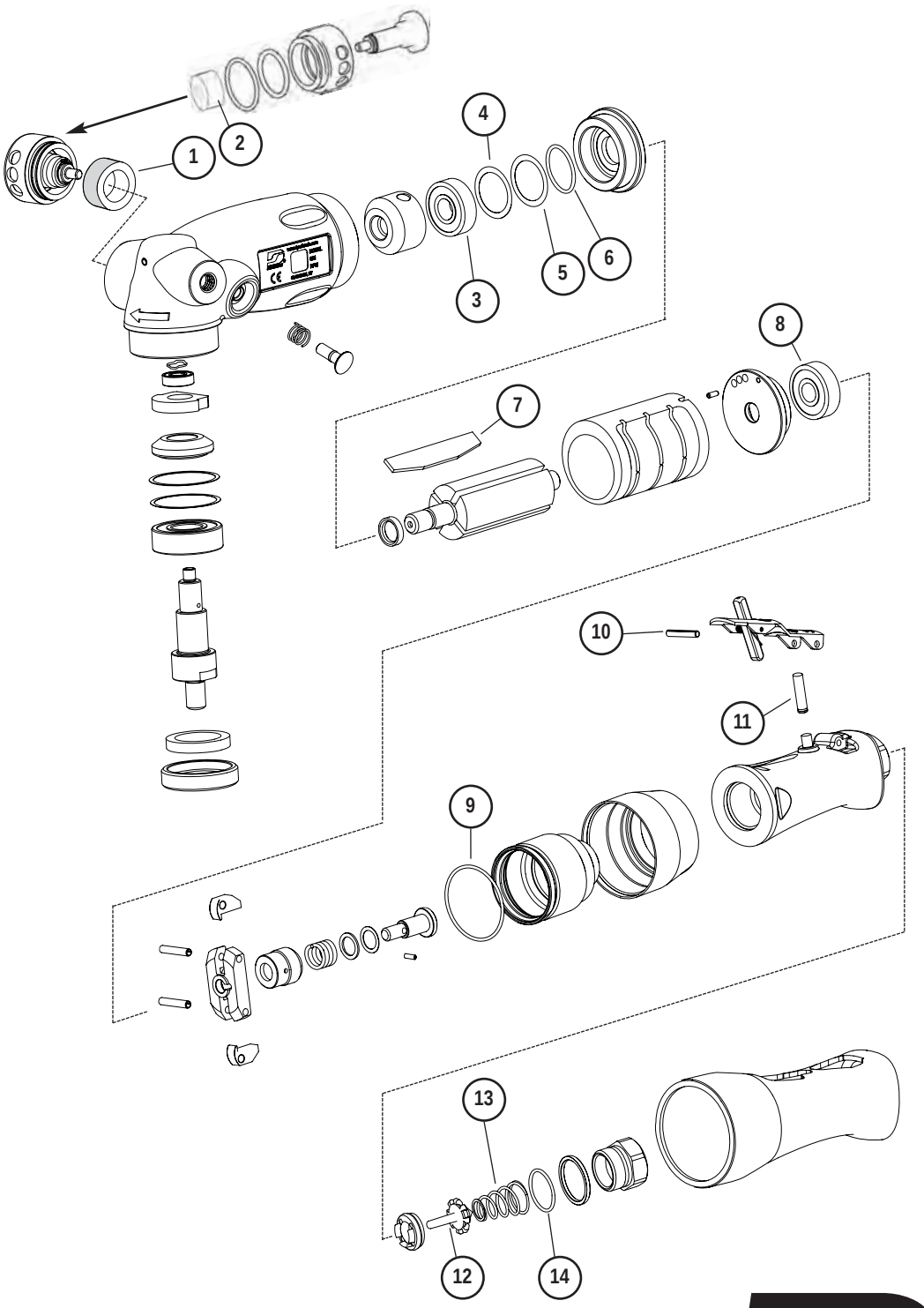


**DYNABRADE, INC.** **www.dynabrade.com**
8989 Sheridan Drive • Clarence, NY 14031-1490 • Phone: (716) 631-0100 • Fax: 716-631-2073 • International Fax: 716-631-2524

©DYNABRADE, INC., 2008 PRINTED IN USA PD08.44_08/08

Buy parts on line at https://Dynashop.co.uk/ for all things Dynabrade